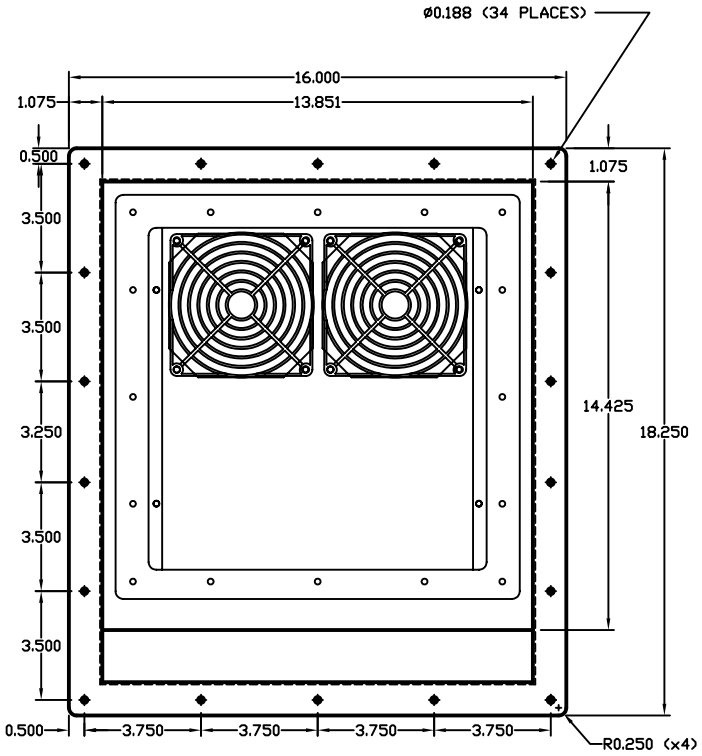

FRONT VIEW

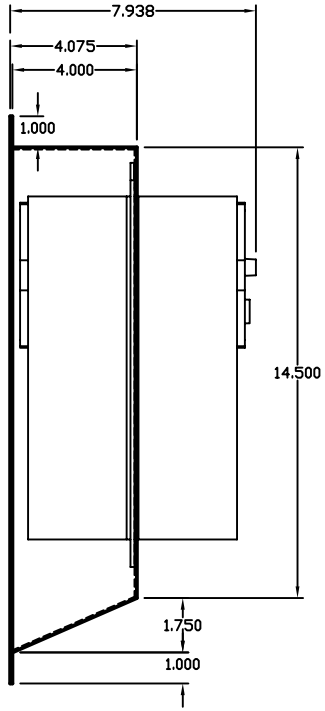

SIDE VIEW

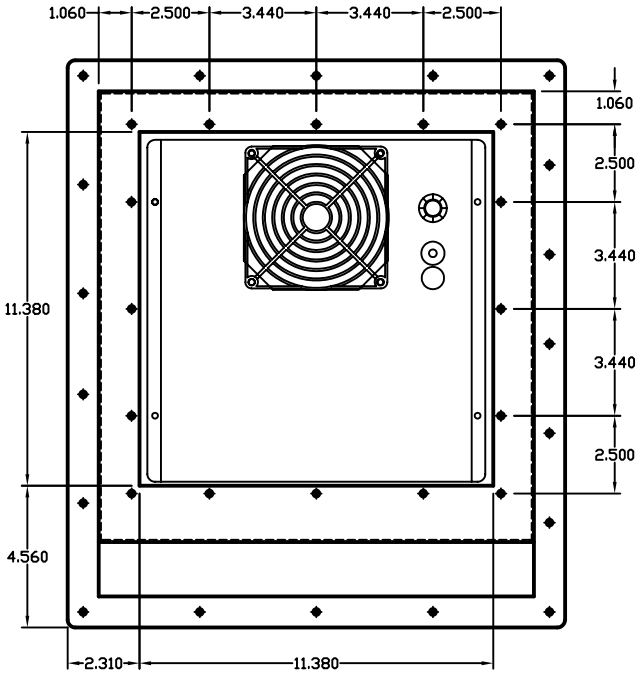

REAR VIEW

MATERIAL IS .080" ALLOY 5052 ALUMINUM

ALL SEAMS TO BE WELDED AND GROUND SMOOTH

THE INFORMATION CONTAINED HEREIN IS PROPRIETARY AND CONFIDENTIAL TO EIC SOLUTIONS, INC. ANY USE, TRANSFER OR DUPLICATION OF THIS INFORMATION IS STRICTLY FORBIDDEN WITHOUT THE EXPRESS WRITTEN CONSENT OF EIC SOLUTIONS, INC.

TOLERANCES UNLESS NOTED

EIC SOLUTIONS, INC.
1825 Stout Dr., Warminster, PA 18974
(215) 443-5190 FAX: (215) 443-9564
WWW.EICSOLUTIONSINC.COM

141 RECESSED MOUNTING FRAME

DRAWN: JMC
DATE: 05/27/07
SCALE: 1/2"=1"
SHT 2 OF 2
SALES